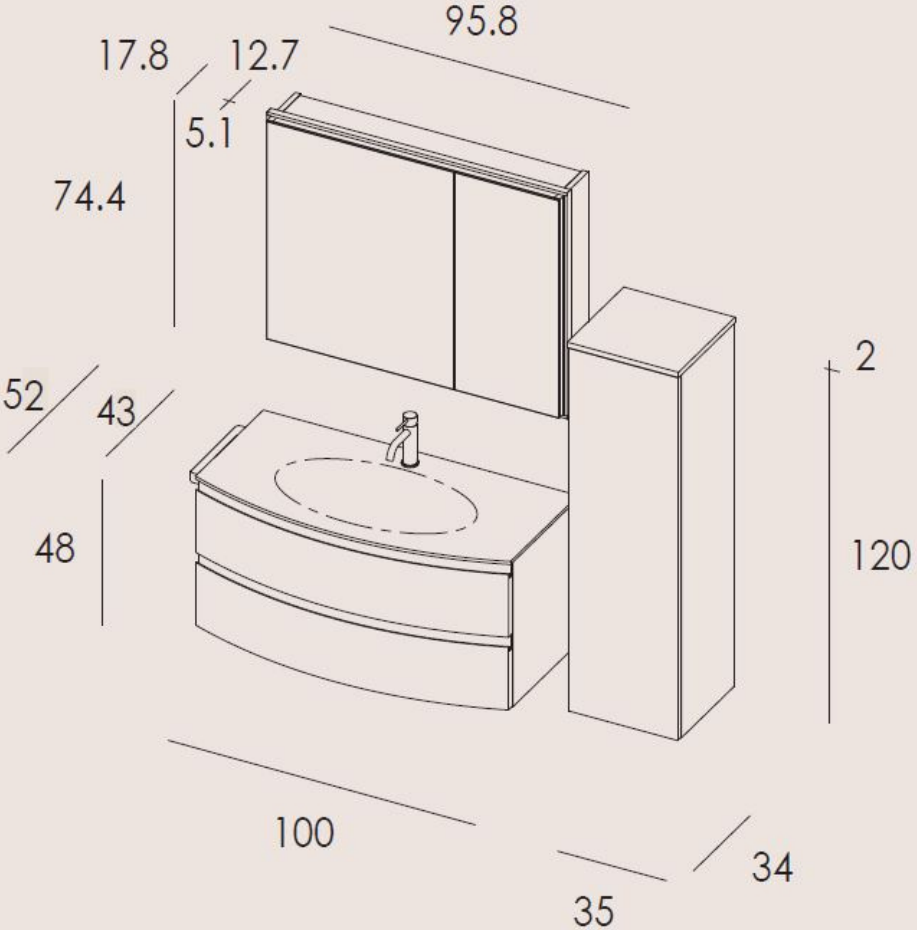
95.8
17.8
12.7
5.1
74.4
52
43
48
2
120
100
35
34